DRAWING USED ON	
DATE	CRANE S/N
T.B.A.	AS REQUIRED

REVISIONS				
ZONE	REV	DESCRIPTION	DATE	APPROVALS
1-A	0	DESCRIPTION	00-00-00	

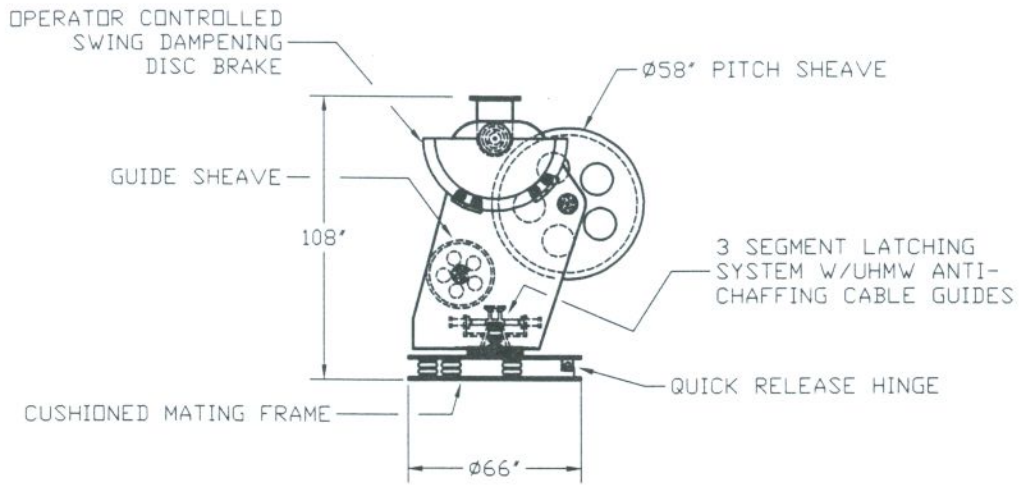

SWING FRAME DETAIL

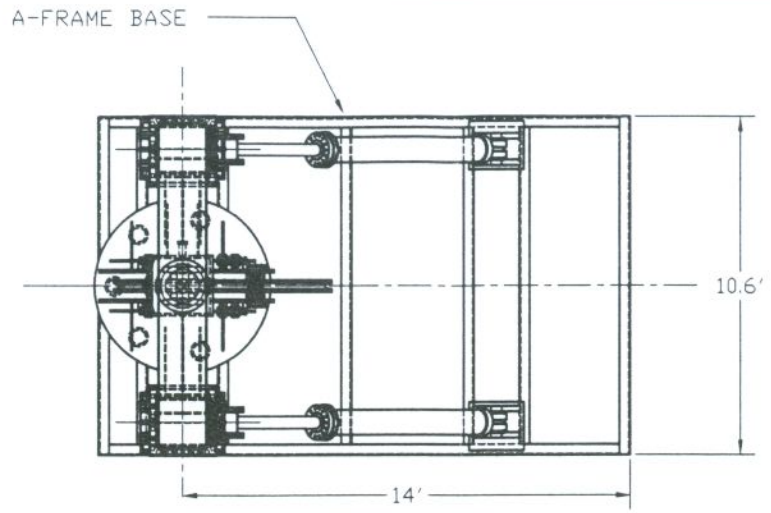

OPERATIONAL DATA

RATED CAPACITY:	13mT outboard capacity in dynamic conditions 7.5 mT Lifting capacity in dynamic conditions
MAXIMUM REACH	11.8' outboard
STOWED REACH:	15' inboard
RETRIEVAL REACH*:	2.6' inboard

*: REACH AT 2m (78 3/4") CLEARANCE BELOW TMS & ROV

SHIPPING WEIGHT:	11,500 Lbs (A-FRAME)
SHIPPING WEIGHT:	1,950 Lbs (SWING FRAME)

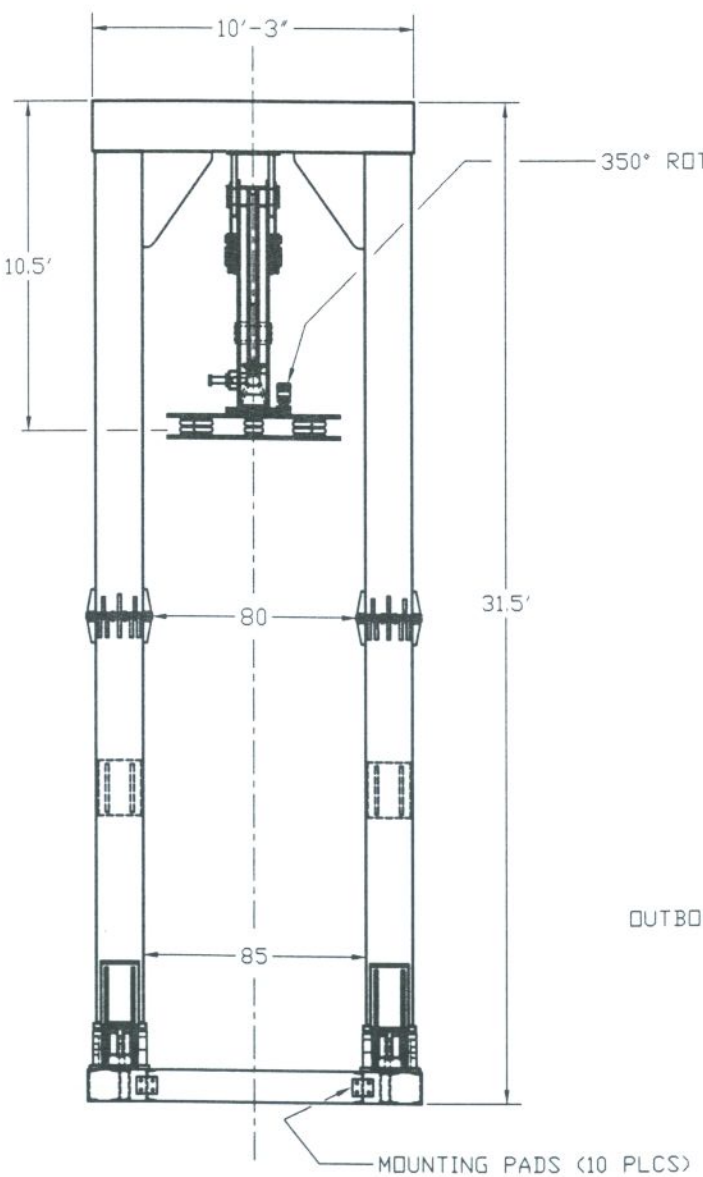

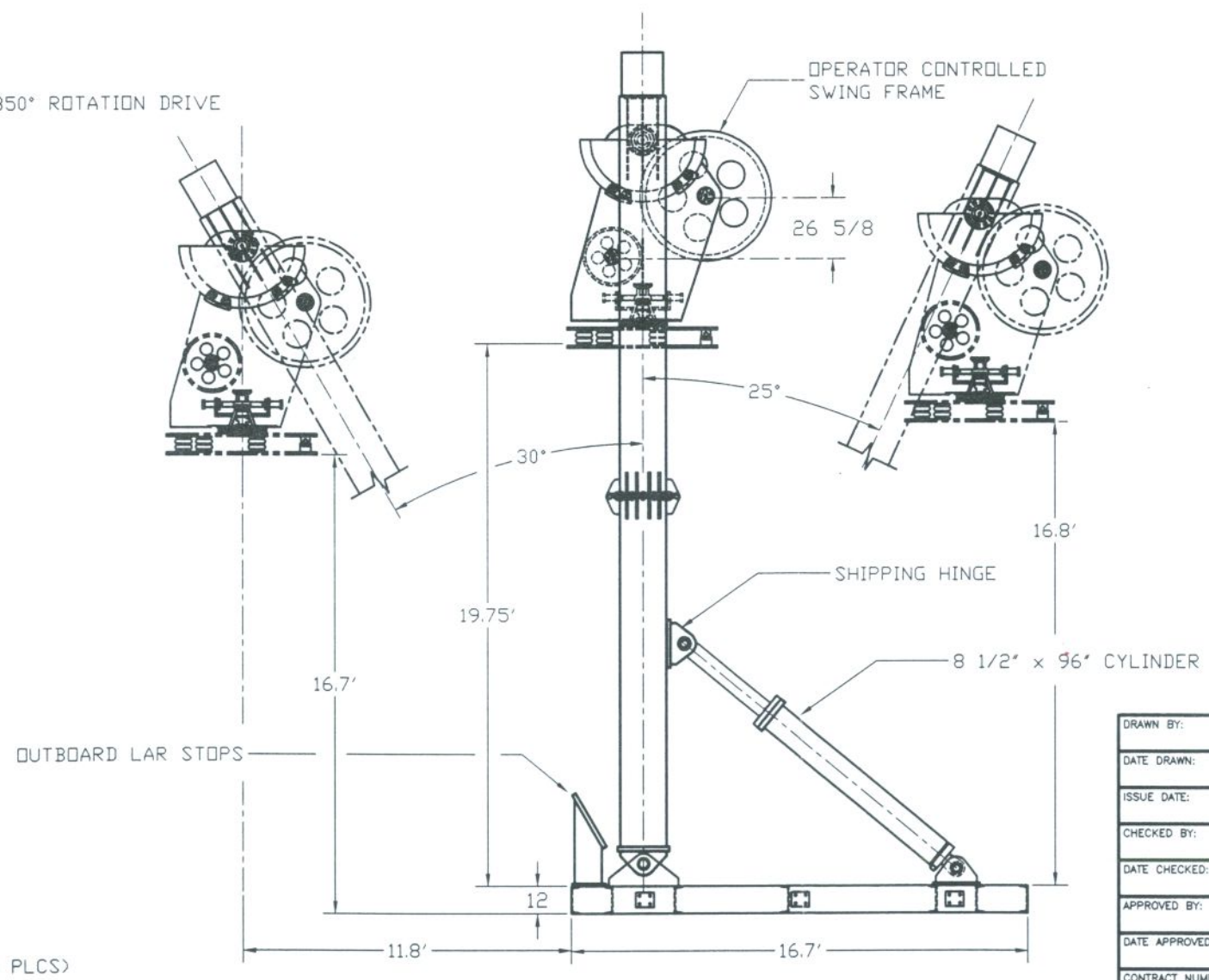

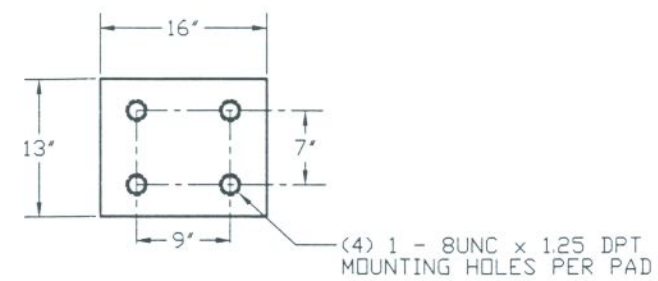

MOUNTING PAD DETAIL
(SCALE 4:1)

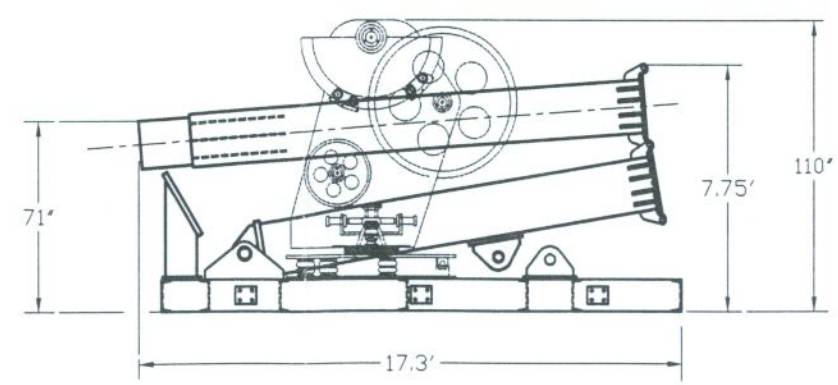

SHIPPING CONFIGURATION

DRAWN BY:	G. ADAMS
DATE DRAWN:	07-14-98
ISSUE DATE:	07-14-98
CHECKED BY:	G. ADAMS
DATE CHECKED:	07-14-98
APPROVED BY:	--
DATE APPROVED:	
CONTRACT NUMBER:	

HYDRA-PRO

Marine Cranes
4259 22nd Ave. W
Seattle, WA. 98199

TITLE
GENERAL ARRANGEMENT AND DATA FOR 13mT A-FRAME

SIZE	CAGE NUMBER	DRAWING NUMBER	REV.
B	083N8	SP-223	0

SCALE	WEIGHT	SHEET NUMBER
NONE	LISTED	1 OF 1